INSTRUCTION MANUAL

TYPE 1304-B

BEAT-FREQUENCY AUDIO GENERATOR

GENERAL RADIO COMPANY

M

INSTRUCTION MANUAL

TYPE 1304-B

BEAT-FREQUENCY AUDIO GENERATOR

Form 1304-0100-M
I D 1419
June, 1967

GENERAL RADIO COMPANY
WEST CONCORD, MASSACHUSETTS, USA

SPECIFICATIONS

Frequency Range: 20 to 40,000 cycles in two ranges.

Frequency Controls: The main control is engraved from 20 to 20,000 cycles per second and has a true logarithmic frequency scale. The total scale length is approximately 12 inches. The effective angle of rotation is 240°, or 80° per decade of frequency. For the higher range, throwing a panel switch adds 20 kc to the scale frequency. The frequency increment dial is calibrated from +50 to -50 cycles.

Frequency Calibration: Within ± (1% + 0.5 cycle) after the oscillator has been correctly set to the line frequency or to zero beat. The 20 kc added by the range switch is accurate within ± 0.5%. Accuracy of frequency-increment dial is ± 1 cycle.

Zero-Beat Indicator: The output voltmeter is used to indicate zero beat.

Frequency Stability: The drift from a cold start is less than 7 cycles in the first hour and is essentially completed within two hours.

Output Voltmeter: Calibrated in volts output at open circuit, and in dbm. Above 10% of full scale the calibration is accurate within ± 5% of the reading.

Output Attenuator: Used only with single-ended output; has three steps of 20 db each, with an accuracy of ± 1% of the nominal attenuation.

Output Control: For each step of the attenuator the output voltage can be varied continuously from zero to the maximum voltage.

Output Voltage: Continuously variable from below 5 millivolts to 50 volts, open circuit. Full-scale, open circuit output voltages of 50 millivolts. 500 millivolts, 5 volts, and 50 volts are provided.

Frequency Characteristic: For a 600-ohm resistive load the variation of output voltage with frequency is as follows:

NORMAL Range, 20 to 20,000 c ± 0.25 db
ADD 20 KC Range, 20–30 kc, ± 0.5 db
30–40 kc, ± 1.0 db

For open-circuit operation the output voltage rises considerably at the higher frequencies.

Patent Nos 2,802,907; Re 24,204; 2,298,177

Output Impedance: 600 ohms, resistive, within ± 2%. At + 20 dbm setting of the output attenuator, the output may be used either balanced or with one side grounded. With one side of the output grounded, the attenuator may be used throughout its entire range.

Output Power: 1 watt, max., into a 600-ohm resistive load.

Harmonic Distortion: Less than 0.25% from 100 to 10,000 cycles. Below 100 cycles the harmonic content increases and may reach 0.5% at 50 cycles. Above 10,000 cycles the harmonic content is less than 1%.

AC Hum: Less than 0.1% of the output voltage for output voltmeter readings above 10% of full scale.

Terminals: TYPE 938 Binding Posts and standard Western Electric double output jack on panel: a standard four-terminal socket at the rear.

Mounting: Aluminum, 19-inch, relay-rack panel; aluminum cabinet. For table mounting (TYPE 1304-BM), aluminum end frames are supplied to fit ends of cabinet; for relay-rack mounting (TYPE 1304-BR), brackets for holding cabinet in rack are supplied. Relay-rack mounting is so arranged that panel and chassis can be removed from cabinet, leaving cabinet in rack, or cabinet can be removed from rear of rack, leaving panel attached to rack.

Power Supply: 105 to 125 (or 210 to 250) volts, 50 to 60 cycles. Power consumption is about 100 watts.

Tube Complement:

2 — 6SL7-GT	1 — 6SA7
2 — 6AV5-GA	1 — 12AT7
2 — 0D3	1 — 5V4-G

Accessories Supplied: TYPE CAP-22 Power Cord, four-terminal plug, and spare fuses.

Dimensions: 19⅜ × 15¼ × 7¼ inches,* over-all.

Net Weight: 39 pounds.**

*(495 x 390 x 185 mm)

**18 kg

Figure 1. Panel View, Type 1304-B Beat-Frequency Audio Generator.

TYPE 1304-B BEAT-FREQUENCY AUDIO GENERATOR

Section 1
INTRODUCTION

1.1 PURPOSE. The Type 1304-B Beat-Frequency Audio Generator (Figure 1) is a signal generator capable of supplying up to 1 watt into a 600-ohm load at frequencies between 20 and 40,000 cycles per second. The Audio Generator is useful in amplitude-vs-frequency tests on audio-frequency equipment, and, as a general-purpose audio generator, is valuable as a power source for bridge measurements, as a modulator for r-f signal generators, and as a test source for acoustic work at both audio and ultrasonic frequencies. The Audio Generator can be coupled to an automatic analyzer or recorder.

1.2 DESCRIPTION.

1.2.1 GENERAL. The Audio Generator is mounted in a heavy-gauge aluminum cabinet, which is equipped with aluminum end frames for table use. If desired, the end frames can be removed and the instrument mounted in a 19-inch relay rack. Supplied with the Type 1304-BR (Relay-Rack Model) Audio Generator are special rack-mounting brackets, which secure cabinet and instrument to the rack, permitting either to be withdrawn independently of the other. Instructions for installing the Type 1304-BR in a relay rack accompany these brackets.

1.2.2 CONTROLS. The following controls are on the front panel of the Type 1304-B Beat-Frequency Audio Generator:

Name	Type	Function
CYCLES INCREMENT	Continuous rotary knob and dial	Permits small frequency variations above and below the main dial indication.
ZERO ADJUST	Continuous rotary knob	Varies frequency for calibration.

Continued

Name	Type	Function
Main tuning control	Continuous rotary knob and gear-driven logarithmic dial	Together with CYCLES INCREMENT and FREQUENCY RANGE controls, indicates frequency of output signal.
POWER	2-position toggle switch	Turns instrument on or off.
OUTPUT	Continuous rotary knob	Varies output voltage from zero to the maximum value for any attenuator setting.
FREQUENCY RANGE	2-position toggle switch	Selects either algebraic sum of main dial and CYCLES INCREMENT settings or this sum plus 20 kc.
Output attenuator	5-position rotary selector switch	Indicates output voltage when voltmeter is at full scale, indicates attenuation in dbm, and provides line-frequency calibration.

1.2.3 CONNECTIONS. The following connections are on the Type 1304-B Beat-Frequency Audio Generator:

Name	Type	Function
OUTPUT 600Ω	Jack-top binding posts (2)	Output terminals.
Ground	Jack-top binding post	Ground connection.
Output jack	Western Electric double output jack	Output terminals for Western Electric plugs.
Output socket	4-terminal socket	Output socket for 4-prong connectors.
Power	Fixed male connector	Accepts power plug and cord supplied.

1.2.4 METER. The panel voltmeter is calibrated in terms of open-circuit voltage, and the full-scale output is the value indicated by the attenuator switch setting. The meter also has a dbm (decibels above or below 1 milliwatt into a 600-ohm load) scale. To obtain the dbm value for a 600-ohm resistive load at the OUTPUT terminals, add the dbm reading algebraically to the attenuator decibel setting. Zero dbm is defined as 1 milliwatt dissipated in a resistance of 600 ohms, and corresponds to 0.775 volt across a 600-ohm load. (For a discussion of output impedance, refer to paragraph 3.5.)

1.3 ACCESSORIES. A power cord, four-terminal plug, and spare fuses are supplied with the instrument.

Other accessories available but not supplied are described in the Appendix, page 21.

Section 2

OPERATING PROCEDURE

2.1 CONNECTION TO POWER SUPPLY. Connect the Audio Generator to a source of power as indicated on the metal plate at the power input socket, using the plug and cord provided. While instruments are normally supplied for 115-volt operation, power-transformer connections can be changed (see Figure 2) to convert to 230-volt operation. When changing connections, be sure to reverse the metal plate so that it will read 230 volts, and also replace the 1.25-amp line fuses with fuses rated at 0.6 amp.

2.2 GROUND CONNECTION. It is generally best to connect the panel ground terminal to an external ground in order to keep hum and noise to a minimum.

2.3 FREQUENCY CALIBRATION.

2.3.1 GENERAL. The frequency calibration can be standardized either at the power-line frequency or at zero. If the power-line frequency is controlled, standardization at line frequency is recommended.

Where maximum stability of calibration is desired, check the standardization occasionally during the first few minutes of operation and readjust if necessary. The frequency drift is less than seven cycles in the first hour of operation and is substantially complete after two hours.

2.3.2 ZERO-BEAT STANDARDIZATION.

a. Set the FREQUENCY RANGE switch to NORMAL.
b. Set the output attenuation switch to one of the db positions.
c. Adjust the OUTPUT control to give near full-scale indication on the meter.
d. Set the main dial and the CYCLES INCREMENT control to zero.
e. With the ZERO ADJUST control, vary the frequency until the meter pointer stops fluctuating and drops to zero.

2.3.3 LINE-FREQUENCY STANDARDIZATION.

a. Set the FREQUENCY RANGE switch to NORMAL.
b. Adjust the OUTPUT control for a midscale meter indication.
c. Set the output attenuator switch to the LINE FREQ CAL position.

d. Set the CYCLES INCREMENT dial to zero and the main dial to the line frequency.

e. Vary the frequency with the ZERO ADJUST control until the beat between the oscillator and power-line frequencies, as indicated by the fluctuation of the meter pointer, is as slow as possible. When the oscillator frequency is near the line frequency there is a large-amplitude fluctuation. At multiples of the line frequency small-amplitude fluctuations are obtained.

f. To determine that the adjustment was made at the correct beat, turn the output attenuator to a db position and make a rough check with zero beat.

2.4 LOAD. The Audio Generator is designed to operate into a load impedance of 600 ohms, but it can be operated into an open circuit without increased distortion. With the output attenuator switch set at +20 db, the harmonic content is approximately doubled when the generator is operated into a very low impedance. With the attenuator switch at any other position, the load impedance has no effect on the waveform.

When the output attenuator switch is set at +20 db and the ground strap is disconnected from the lower OUTPUT terminal, the output circuit is balanced well enough for operation into most audio-frequency equipment. Since the attenuation is inserted in only the lead connected to the upper OUTPUT terminal, the other attenuator positions should be used for only single-ended output.

In addition to the OUTPUT binding posts, two other sets of output terminals are provided. A Western-Electric-type double jack is provided in the upper right-hand corner of the front panel, and a four-terminal output socket is available in the rear lower left corner of the chassis. When a plug is inserted in the Western Electric output jack, all other output terminals are automatically disconnected. If one side of the load is grounded, connect that side to the right-hand jack. If the output attenuator is to be used in any position other than +20 db, connect the ground strap to the lower OUTPUT binding post.

Section 3

PRINCIPLES OF OPERATION

3.1 GENERAL. An elementary schematic diagram of the Audio Generator is given in Figure 3. The fixed oscillator delivers a signal of approximately either 190 or 210 kc to the mixer, where this signal is combined with a signal from the variable oscillator. The latter signal is variable from approximately 170 to 190 kc. The difference frequency,

which will lie between 0 to 20 or 20 to 40 kc, is fed to the amplifier input level control through a low-pass filter, which removes frequency components above 40 kc. The output of the amplifier is transformer-coupled to the output system. The complete schematic diagram, including power supply, is shown in Figure 2.

3.2 OSCILLATORS. Universal-wound coils on ceramic forms are used in the oscillator tuned circuits for maximum mechanical stability. The oscillator tubes are Type 6SL7-GT twin triodes, with the plate of the oscillator section grounded and the other section used as a cathode-follower isolating amplifier. With grounded plate operation of the oscillator, no tube shields are necessary to prevent capacitive coupling.

3.3 MIXER. The Type 6AS7 mixer tube operates with bias adjustments on grids 1 and 3. This permits adjustment of voltage and harmonic content of the output signal. A cylindrical magnetic shield reduces hum pickup from the power transformer's magnetic field when the instrument is in its cabinet.

3.4 AMPLIFIER. The low-distortion amplifier uses a single-ended push-pull output stage. One section of a Type 12AT7 twin triode drives the other section, which is connected as a phase inverter to drive the output stage in push-pull. The amplifier output is connected through a voltage divider to the cathode of the input amplifier tube to introduce negative feedback.

3.5 OUTPUT SYSTEM. The output system includes an output level control, an output transformer, a voltmeter, and an attenuator. The output level control, actually located at the input end of the amplifier, enables the amplifier input to be varied smoothly from zero to the level of the output from the low-pass filter.

An average-reading voltmeter, following the output transformer, uses two 1N54-A germanium crystal diodes in a full-wave rectifier circuit.

The resistive attenuator consists of two T-pads, which are switched to provide attenuation in 20-db steps from 0 to 60 db.

The output impedance of the Audio Generator is 600 ohms, if the source voltage is read from the voltmeter. The 600-ohm impedance consists of a 600-ohm series resistor, when the attenuator is set at the +20-dbm position; at all other attenuator positions, it consists of the 600-ohm resistor in combination with a 600-ohm attenuator network. The amplifier output impedance at the voltmeter is not zero, however, and load current through this impedance causes a drop in the meter reading when a load is connected across the output circuit after the 600-ohm series resistor. The amplifier output impedance varies with frequency and results in a meter-reading drop which varies from about 20% at low frequencies to about 50% at high frequencies, when a 600-ohm load is connected across the output circuit. Such a load is applied whenever the attenuator is switched to any position other than +20 dbm. With the

attenuator set at +20 dbm, connection of a load to the output terminals causes a drop in the meter reading, but at any other attenuator setting the output circuit is already loaded by the attenuator network, and connection of any additional load to the output terminals has practically no effect on the meter reading.

The amplifier output impedance at the voltmeter may be considered to be zero because the voltage at that point is indicated by the voltmeter and therefore is known. Thus the source impedance at the OUTPUT terminals can be considered a resistance of 600 ohms, the resistance between the voltmeter and the terminals. If a 600-ohm resistive load is connected to the OUTPUT terminals, the voltage at the load will be

$$\frac{600}{600 + 600}$$

or 1/2 of that indicated by the meter and attenuator switch setting. For other load impedances, this simple relation is expressed:

$$E_L = \frac{Z_L E_i}{Z_L + 600}$$

where:

E_L = voltage at the load

Z_L = load impedance

E_i = voltage indicated by meter and attenuator switch

In the calculation of voltage at the load, note that the indicated voltage is the voltage denoted by the meter and the attenuator switch after any initial drop as the load is connected.

Section 4

SERVICE AND MAINTENANCE

4.1 WARRANTY. General Radio warrants that each new instrument sold by us is free from defects in material and workmanship, and that, properly used, it will perform in full accordance with applicable specifications for a period of two years after original shipment. Any instrument or part that is found within the two-year period not to meet these standards after examination by our factory, sales engineering office, or authorized repair agency personnel, will be repaired, or, at our option, replaced without charge, except for tubes, semiconductors, or batteries that have given normal service.

4.2 SERVICE. The two-year warranty stated above attests the quality of materials and workmanship in our products. When difficulties do occur, our service engineers will assist in any way possible. If the difficulty cannot be eliminated by use of the following service instructions, please write or phone our Service Department (see rear cover), giving full information of the trouble and of steps taken to remedy it. Be sure to mention the serial and type numbers of the instrument.

Before returning an instrument to General Radio for service, please write to our Service Department or nearest sales engineering office, requesting a Returned Material Tag. Use of this tag will ensure proper handling and identification. For instruments not covered by the warranty, a purchase order should be forwarded to avoid unnecessary delay.

4.3 READJUSTMENTS REQUIRED BY TUBE REPLACEMENT.

4.3.1 V1 REPLACEMENT. Replacement of V1 may shift the zero-frequency adjustment beyond the range of the ZERO ADJUST control. To readjust, proceed as follows:

a. Set the main dial and the CYCLES INCREMENT dial to zero.
b. Set the ZERO ADJUST knob so that the pointer points upward.
c. Set the FREQUENCY RANGE switch to NORMAL.
d. Adjust C7 for a zero beat on the output meter.

4.3.2 V2 REPLACEMENT. Replacement of V2 may also shift the zero-frequency adjustment beyond the range of the ZERO ADJUST control. To readjust, proceed as follows:

a. Set controls as described above (4.3.1, a through c).
b. Adjust C16 for a zero beat on the output meter.

4.3.3 V3 REPLACEMENT. Replacement of V3 may affect the output level and the harmonic and hum content. To readjust, proceed as follows:

a. Connect a wave analyzer or a noise and distortion meter to the OUTPUT terminals.

b. Set the output frequency to 1 kc and the attenuator to 5 v.

c. Set the OUTPUT control fully clockwise and adjust R12 for an output meter reading of slightly over 5 volts.

d. Set the attenuator to 50 v and set the OUTPUT control for the same output voltage as that obtained in c, above. Adjust R11 for minimum distortion, and adjust R56, if installed, for minimum hum. Later instruments use dc heaters and do not require R56.

e. R11, R12, and R56 interact; repeat their adjustments for proper output level and minimum hum and distortion.

4.3.4 V4 OR V6 REPLACEMENT. Replacement of V4 or V6 may affect the control grid bias voltage of these tubes. To readjust, proceed as follows:

a. Set the OUTPUT control fully counterclockwise.

b. Measure the bias of each tube between the grid and cathode (pins 1 and 3) using a voltmeter of at least 20,000 Ω/volt.

c. Correct biases depend on the type of tubes used for V4 and V6. For Type 6AV5 tubes the correct bias is -17v, and for Type 6AU5 tubes (used in early instruments) the correct bias is -14v.

d. Adjust R28 for the correct bias of V4 and adjust R32 for the correct bias of V6. R28 and R32 interact; repeat their adjustments for proper bias.

4.3.5 D1 or D2 REPLACEMENT. Replacement of D1 or D2, the voltmeter diodes, may affect the accuracy of the output meter. To readjust, proceed as follows:

a. Connect a voltmeter with an input impedance of at least 100 kilohms to the OUTPUT terminals.

b. Set the output attenuator to 50 v and set the OUTPUT control for 20 volts, as measured on the electronic voltmeter.

c. Adjust R36 for a reading of 2 on the output meter.

4.4 CALIBRATION PROCEDURE.

4.4.1 EQUIPMENT REQUIRED. The following equipment is required for a complete calibration of the Type 1304-B Beat-Frequency Audio Generator:

1 Type 500-G resistor, or a 600-ohm, ±0.1%, 1-watt, noninductive resistor.

1 Type 1130-A, 1150-A, or 1151-A Digital Frequency Meter, or a frequency meter accurate to ±0.1% and capable of measuring 0 to 40-kc sine-wave signals.
A standard signal generator, in conjunction with a mixer-readout arrangement, can also be used. The mixer-readout may consist of either a heterodyne mixer and zero-beat detector (meter, earphones, etc) or an oscilloscope (Lissajous technique).

1 Type 1450-TB Decade Attenuator, or a 600-ohm attenuator, covering 0 to 70 db in 0.1-db steps, accurate to ±0.02 db ±0.25% and capable of handling 1-watt input-power levels.

1 Type 1806-A Electronic Voltmeter, or an electronic voltmeter with an input resistance of 25 mΩ, or greater, an accuracy of ±3%, and capable of measuring 10 to 20 v, dc, and 0.5 to 50 v, rms, 0 to 220 kc.

1 Type 1932-A Distortion and Noise Meter, or a distortion meter accurate to ±5% and capable of measuring second- and third-harmonic distortion from 0.1% to 5% on signals with frequencies of 100 cps to 10 kc and amplitude of 5 v to 50 v; and a noise meter, accurate to ±5% and capable of measuring noise and hum levels as low as 1 mv, rms.

4.4.2 OUTPUT TUBE BIAS. Set the POWER switch to on, the FREQUENCY RANGE switch to NORMAL, and the OUTPUT control fully counterclockwise. Use a dc voltmeter of at least 20,000 Ω/volt to check the output biases as follows (NOTE: Biases depend on the type of tubes used for V4 and V6):

Measure Between Pins 1 and 3 of	Adjust	Proper Bias 6AV5	Proper Bias 6AU5 (early units)
V4	R28	-17v	-14v
V6	R32	-17v	-14v

R28 and R32 interact; repeat their adjustments for proper bias.

4.4.3 OSCILLATOR OUTPUT AMPLITUDES. Remove the bottom cover of the oscillator compartment. Use an electronic voltmeter to measure the oscillator outputs as follows:

Oscillator	Check Point	Adjust	For
Variable	V3, pin 8	C22	1.9 to 2.1v, rms
Fixed	V3, pin 5	C11	0.58 to 0.62v, rms

Disconnect the electronic voltmeter and replace the oscillator compartment cover.

4.4.4 LOW-PASS FILTER. Remove the fixed oscillator tube, V1. Set the main frequency dial to 20 kc, the attenuator to 50 v, and the OUTPUT control fully clockwise. Connect an electronic voltmeter or an oscilloscope to the OUTPUT terminals and adjust C30 for minimum output (typically about 100 mv, rms).

Disconnect the voltmeter and replace V1. Set the OUTPUT control for an on-scale meter reading.

4.4.5 PRELIMINARY FREQUENCY ADJUSTMENTS.

General

These preliminary adjustments should not be made unless the Type 1304-B Beat-Frequency Audio Generator is suspected of being seriously misadjusted. Presetting these adjustments necessitates a complete re-

calibration of the frequency dial tracking (paragraph 4.4.6) and the CYCLES INCREMENT dial tracking (paragraph 4.4.7).

This step checks the various frequency controls and adjustments for sufficient range to calibrate the instrument adequately with a minimum of backtracking.

Setup.

Set the FREQUENCY RANGE switch to NORMAL and the main frequency dial to 200. Connect a frequency meter to the OUTPUT terminals, set the attenuator and OUTPUT controls for a usable output, and perform the following checks and adjustments:

Set	For
CYCLES INCREMENT	Highest frequency possible — note frequency.
CYCLES INCREMENT	Lowest frequency possible — note frequency.
CYCLES INCREMENT	Mid frequency — dial must read 0; if it doesn't, slip the dial on its shaft.

Example: If the highest frequency is 245 cps and lowest is 145 cps, the mid frequency is 195 cps. When the CYCLES INCREMENT dial is set for 195-cycle output, the dial must read 0.

ZERO ADJUST	Highest frequency possible — note frequency.
ZERO ADJUST	Lowest frequency possible — note frequency.
ZERO ADJUST	Mid frequency — the pointer must point straight up; if it doesn't, slip the knob on its shaft.
C7 and C16	Highest frequency possible — note frequency.
C16	Lowest frequency possible — note frequency.
C16	Mid frequency -- note frequency.
C7	Lowest frequency possible — note frequency.
C7	Mid frequency.

4.4.6 FREQUENCY DIAL TRACKING.

NORMAL adjustment, C7 and C16

Set the main frequency dial to 0, the CYCLES INCREMENT dial to 0, and the ZERO ADJUST control so that the pointer points straight up. Set the OUTPUT control for a near full-scale indication on the output meter and adjust C7 (and C16, if necessary) until the meter needle stops fluctuating and drops to zero.

Set the main frequency dial to 20 kc. Readjust C7 and C16, if necessary, for exactly 20 kc, as measured on the frequency meter. The adjustments at 0 and 20 kc interact and must be repeated until the spread between 0 and 20 kc is accurate.

Check the main frequency dial tracking as follows:

Main Frequency Dial	Tolerance (±1%, ±0.5 cps)	Main Frequency Dial	Tolerance (±1%, ±0.5 cps)
20 cps	set to 20 cps	1 kc	0.9895 to 1.011 kc
30	29.2 to 30.8	1.5	1.485 to 1.516
40	39.1 to 40.9	2	1.980 to 2.021
50	49 to 51	3	2.970 to 3.031
*60	*58.9 to 61.1	4	3.960 to 4.041
80	78.7 to 81.3	5	4.950 to 5.051
		6	5.940 to 6.061
100	98.5 to 101.5	8	7.920 to 8.081
150	148 to 152		
200	197.5 to 102.5	10	9.900 to 10.10
300	296.5 to 303.5	15	14.85 to 15.15
400	395.5 to 404.5	20	19.80 to 20.20
600	593.5 to 606.5		
800	791.5 to 808.5		

* It is important that the frequency be as accurate as possible at 60 cps so that the line-frequency standardization (paragraph 2.3.3) is accurate.

ADD 20 kc adjustment, C4

Set the main frequency dial to 20 kc and the FREQUENCY RANGE switch to ADD 20 kc. Keep the CYCLES INCREMENT dial at 0 and the ZERO ADJUST control so the pointer points straight up. Adjust C4 for exactly 40 kc, as read on the frequency meter.

Troubleshooting Notes

1. Poor tracking.
   a. If the main frequency dial is out of tolerance at several points, the main tuning capacitor, C15, is not tracking properly. There are tracking adjustments on this capacitor in the form of adjustable serrated plates, located on the rear of the rotor.
   b. Adjust the serrated plate that is just meshing with the stator at the point being calibrated on the main frequency dial. Note that at the lower frequencies more than one plate may cover each point on the main frequency dial, while at the higher frequencies one plate may cover several points. The plates near the 0 end may be twisted for greater accuracy.

c. To perform a complete tracking readjustment procedure, check the position of the main frequency dial in relation to the position of the rotor of C15. With the dial set at 20 kc, the rotor must be 1/16 to 1/8 inch less than full mesh. If it isn't, slip the dial on its shaft.

4.4.7 CYCLES INCREMENT DIAL TRACKING.

NORMAL tracking

Set the FREQUENCY RANGE switch to NORMAL, the CYCLES INCREMENT dial to +50, and the main frequency dial for 150 cps, as measured on the frequency meter. Check the accuracy of the CYCLES INCREMENT dial as follows:

Cycles Increment	Tolerance (±1 cps)
+50	set to 150 cps
+20	119 to 121
0	99 to 101
-20	79 to 81
-40	59 to 61
-50	49 to 51

ADD 20 kc tracking

Set FREQUENCY RANGE switch to ADD 20 kc, the CYCLES INCREMENT dial to 0, and the main frequency dial to 40 cps. Set the ZERO ADJUST control for 20 kc, as measured on the frequency meter.

Set the main frequency dial to the point indicated in the following table and set the CYCLES INCREMENT dial for 20 kc, as measured on the frequency meter. After setting the CYCLES INCREMENT for 20 kc, it must read as follows:

Main Frequency Dial	Increment Dial Reading (after setting for 20 kc)
40	0, exact
20	+20, ±1/2 division
0	+40, ±1/2 division
60	-20, ±1/2 division
80	-40, ±1/2 division

Disconnect the frequency meter.

Troubleshooting Notes

1. Poor tracking

a. If the CYCLES INCREMENT dial is out of tolerance at several points, the CYCLES INCREMENT tuning capacitor, C1, is not tracking properly. There are no adjustments, as such, on this capacitor, but tracking and total capacitance can be varied by physically bending, or otherwise moving, the rotor and stator plates.

4.4.8 OUTPUT AMPLITUDE.

High-level Measurements

Connect a 600-ohm termination to the OUTPUT terminals and monitor the output with an electronic voltmeter. Set the attenuator to 50 v and adjust the output amplitude characteristics as follows:

Frequency Range	Main Frequency Dial	Adjust	For output of
NORMAL	1 kc	R12	25 v, rms
NORMAL	Vary between 1 kc and 20 kc	C31 and C59 (on later instruments)	24.5 to 25.5 v, rms
ADD 20 KC	Vary between 30 cps and 20 kc	C27	23 to 27 v, rms

C31, C59 (if installed), and C27 interact; repeat their adjustments for the proper output voltage limits.

Low-Level Measurements

Disconnect the electronic voltmeter, but keep the 600-ohm termination connected. Set the attenuator to 5 v and use the output meter on the Type 1304-B for the following measurements;

Frequency Range	Main Frequency Dial	Adjust	For output of
NORMAL	1 kc	OUTPUT control	2.5 v
NORMAL	Vary between 20 cps and 20 kc	check	2.45 to 2.55 v
ADD 20 kc	30 cps	OUTPUT control	2.5 v
ADD 20 kc	Vary between 20 cps and 10 kc	check	2.5 to 2.7 v
ADD 20 kc	Vary between 10 kc and 20 kc	check	2.3 to 2.7 v

4.4.9 OUTPUT NOISE, DISTORTION, AND HUM. Set the FREQUENCY RANGE switch to NORMAL and perform the following checks, connecting the appropriate measuring device to the OUTPUT terminals:

Main Frequency Dial	Attenuator	OUTPUT control	Adjust	For
Connect the 600-ohm termination to OUTPUT terminals.				
1 kc	50 v	fully counter-clockwise	check	Noise: -55 dbm (1.4 mv, rms) or less.
Disconnect the 600Ω termination.				
1 kc	5 v	fully clockwise	check	5.4 v on output meter. Calibrate distortion meter for 100%.
1 kc	50 v	Set for 5.4 v on output meter	R11	Minimum distortion. R11 is capable of two minima; select the one that results in the least distortion.
1 kc	50 v	Set as above	R56 (on early instru-ments	Minimum hum. R56 was removed from later instruments due to the incorporation of dc heaters.

R11, R12, and R56 (if installed) interact; repeat their adjustments for 0.15%, or less, total distortion and hum.

1 kc	5 v	fully clockwise	check	Distortion: 0.18%, or less.
10 kc	50 v	fully clockwise	C53 (on later instru-ments	Distortion: 0.2% or less.
100 cps	5 v	fully clockwise	check	Distortion: 0.2% or less.

4.4.10 OUTPUT METER. Keep the 600-ohm termination disconnected. Connect an electronic voltmeter to the OUTPUT terminals. Set the FREQUENCY RANGE switch to NORMAL and the main frequency dial to 1 kc.

Set the attenuator to 50 v and the output control for 20 volts, as measured on the electronic voltmeter. Adjust R36 for a reading of 2 on the output meter of the Type 1304-B.

The output meter must read within ±3%, at 5, 10, and 50 volts. Readjust R36, if necessary, to average any error over the scale.

Set the output for 20 volts, as read on the output meter. Change the main frequency dial, first to 100 cps and then to 40 kc; the output meter must read within ±0.5% of 20 v at both frequencies.

4.4.11 ATTENUATOR. The accuracy of the attenuator is ±1% of the nominal attenuation and is checked by comparing it with an external attenuator of known accuracy.

Connect an accurate 600-ohm decade attenuator to the OUTPUT terminals and terminate the decade attenuator in 600 ohms. Connect a distortion and noise meter to the output of the decade attenuator.

Set the generator frequency to 1 kc, the OUTPUT control for 1 volt, as measured on the output meter, and proceed as follows:

Type 1304-B Output Attenuator	External Attenuator	Procedure
+20 db	62 db	Set the distortion meter sensitivity for a convenient reading.
0 db	42 db	Vary the external attenuator for the same distortion meter reading as above, External attenuator must read 42 db, ±0.2 db.
-20 db	22 db	Same procedure as above except the external attenuator must read 22 db, ±0.4 db.
-40 db	2 db	Same as above except the external attenuator must read 2 db, ±0.6 db.

Disconnect the external attenuator and the distortion meter.

4.4.12 FREQUENCY DRIFT.

Drift with line voltage changes.

Connect a frequency meter to the OUTPUT terminals. After the generator has been on for at least two hours, vary the line voltage from 105 to 125 volts. The frequency must not vary more than 5 cps.

Drift with temperature changes.

Turn the generator off and let it cool for at least three hours. Connect a frequency meter to the OUTPUT terminals, set the CYCLES INCREMENT dial to 0, and the main frequency dial (or the ZERO ADJUST control) for exactly 50 cps, as measured on the frequency meter.

Every 15 minutes, for a period of one hour, restore the frequency to 50 cps with the CYCLES INCREMENT dial. The frequency drift, as read on the CYCLES INCREMENT dial, must be less than 7 cps. Drift after two hours must be less than 9 cps.

Troubleshooting Notes

1. Excessive frequency drift with temperature
   a. Line voltage not held constant.
   b. Frequency drift with temperature can be reduced by adding a negative coefficient capacitor to one of the oscillator circuits. If the CYCLES INCREMENT dial indicates drift in a - direction, the capacitor is installed in the variable oscillator circuit (C17); if drift is in a + direction, the capacitor is installed in the fixed oscillator circuit (C8).

      A Type N-500, 7- to 45-pf capacitor will compensate for a maximum drift of 20 cps in two hours. A Type N-750-A, 47-pf capacitor will compensate for a drift of 30 cps.

      If C17 is already installed and the drift is -, increase its capacitance to compensate. If drift is + and decreasing the capacitance of C17 won't compensate for it, remove C17 from the variable oscillator circuit and install it in the fixed oscillator circuit (where it becomes C8). Then adjust it to minimize drift.

      If C8 is already installed and the drift is +, increase its capacitance to compensate for it. If the drift is -, and decreasing the capacitance of C8 won't compensate for it, remove C8 from the fixed oscillator circuit and install it in the variable oscillator circuit (where it becomes C17). Then adjust it to minimize drift.

      Note that C4, C7, and C16 must be readjusted whenever the temperature-compensating capacitor is readjusted or changed from one oscillator circuit to the other.

Table Of Voltages And Resistances

TUBE TYPE	PIN	VOLTS TO GND	RES TO GND
V1, V2 (6SL7GT)	1	--	1.8 M
	2	260	15 k
	3	0	0.5
	4	46.5	115 k
	5	260	15 k
	6	48	28 k
	7	58	66 k
	8	58	66 k
V3 (6SA7)	1	0	0
	2	64	66 k
	3	260	76 k
	4	90	75 k
	5	0	150 k
	6	7.0	15 k
	7	58	66 k
	8	3.0	170 k
V4 (6AV5)	1	133	680 k
	2	58	66 k
	3	150	55 k
	5	290	0
	7	58	66 k
	8	288	150
V5 (12AT7)	1	115	100 k
	2	0	1 M
	3	1.7	1 k
	4	58	66 k
	5	58	66 k
	6	250	20 k
	7	44	2.2 M
	8	47	19.8 k
	9	58	66 k
V6 (6AV5)	1	0	560 k
	2	58	66 k
	3	17	200
	5	150	56 k
	7	58	66 k
	8	149	56 k
V7 (OD3)	2	0	0
	5	150	∞
V8 (OD3)	2	150	∞
	5	300	0
V9 (5V4G)	2	380	1 k
	4	360 ac	108
	6	360 ac	100
	8	380	1 k

Notes

(1) Input resistance of dc voltmeter must be several times the value listed in the resistance column, to avoid loading errors.
(2) Both panel OUTPUT controls must be set fully clockwise.
(3) Volts are dc unless otherwise stated.
(4) Resistance is in ohms unless otherwise indicated by k (kilohms) or M (megohms).
(5) Resistance measurements should be made with power disconnected, and with pin 5 of V4 and pin 5 of V8 grounded to the chassis.

REF. NO.	CAPACITORS	PART NO.
C1	5	0368-4130
C2	Mica 900 ±1%	1304-4020
C3	Mica 0.0059μf ±1%	4560-0200
C4	Air 7-140	4380-1100
C5	Mica 375 ±1%	1304-4000
C6	Mica 525 ±1%	1304-4010
C7	Air 7-140	4380-1000
C8	Trimmer 7-45	4910-0100
C9	Mica 160 ±10%	4660-3660
C10	Oil 0.5μf ±10% 600 v	4510-2700
C11	Trimmer 1.5-7	4910-0300
C12	Mica 150 ±10%	4600-3500
C13	Mica 500 ±10%	4660-5600
C14	Air 3.3	0846-4040
C15	Air 415	0539-4104
C16	Air 7-140	4380-1000
C17	Trimmer 7-45	4910-0100
C18★	Mica 0.001425μf ±1%	1304-4020 1304-4010
C19	Mica 160 ±10%	4660-3600
C20	Oil 0.5μf ±10% 600 v	4510-2700
C21	Mica 50 ±10%	4600-2000
C22	Trimmer 3-12	4910-0600
C23	Mica 500 ±10%	4660-5600
C24	Mica 50 ±10%	4600-2000
C25	Electrolytic Block 200μf +100% -10% 25 v	4460-0300
C26	Electrolytic Block 15μf +100% -10% 450 v	4460-0300
C27	Air 3-25	4380-0100
C28	Mica 10 ±5%	4660-0300
C29	Mica 20 ±5%	4660-0600
C30	Trimmer 1.5-7	4910-0300
C31	Air 3-25	4380-0100
C32	Oil 0.047μf ±10% 600 v	4510-4200
C33	Mica 100 ±2%	4690-1400
C34	Electrolytic 4μf +100% -10% 450 v	4450-1200
C35	Oil 0.047μf ±10% 600 v	
C36	Mica 25 ±10%	4660-0900
C37	Wax 0.047μf ±10% 400 v	5020-1000
C38	Electrolytic Block 100μf +100% -10% 350 v	4460-1600
C39	Electrolytic Block 60μf +100% -10% 450 v	4460-1700
C40	Electrolytic Block 250μf +100% -10% 25 v	
C41	Oil 0.41μf ±10% 600 v	4510-4400
C42	Oil 0.01μf ±10% 600 v	4510-4400
C43	Mica 25 ±10%	4660-0900
C44	Electrolytic Block 40μf +100% -10% 450 v	4460-0600
C45	Electrolytic Block 40μf +100% -10% 450 v	4460-0600
C46	Electrolytic Block 40μf +100% -10% 450 v	4460-0600
C47	Electrolytic Block 40μf +100% -10% 450 v	4460-0600
C48	Electrolytic Block 20μf +100% -10% 450 v	4460-0900
C49	Electrolytic Block 20μf +100% -10% 450 v	4460-0900
C50	Electrolytic Block 20μf +100% -10% 450 v	4460-0900
C51	Electrolytic Block 20μf +100% -10% 450 v	4460-0900
C52	Oil 0.0047μf ±10% 600 v	4510-4300
C53	Trimmer 7-45	4910-0100
C54	Wax 0.047μf ±10% 400 v	5020-1000
C55	Electrolytic 10μf +100% -10% 250 v	4450-2100
C56	Mica 47 ±10%	4660-1800
C57	Electrolytic 800μf 10 v	4450-5603
C58	Electrolytic 800μf 10 v	4450-5603
C59	Trimmer 1.5-7	4910-0300

RESISTORS

REF. NO.	RESISTORS	PART NO.
R1	Composition, 1.8M ±5% 1/2 w	6100-5185
R2	Composition, 68k ±5% 1/2 w	6100-3685
R3	Composition, 27k ±5% 1/2 w	6100-3275
R4	Composition, 1.0k ±5% 1/2 w	6100-2105
R5	Composition, 15k ±10% 1/2 w	6100-3155
R6	Composition, 15k ±10% 1/2 w	6100-3155
R7	Composition, 27k ±5% 1/2 w	6100-3275
R8	Composition, 68k ±5% 1/2 w	6100-2105
R9	Composition, 1.0k ±5% 1/2 w	6100-2105
R10	Composition, 1.8M ±5% 1/2 w	6100-5185
R11	Potentiometer, Composition 10k ±10%	6010-0900
R12	Potentiometer, Composition 10k ±10%	6010-0900
R13	Composition, 16k ±5% 1/2 w	6100-3165
R14	Composition, 150k ±5% 1/2 w	6100-4155
R15	Composition, 150k ±5% 1/2 w	6100-4155
R16	Composition, 75k ±5% 1 w	6100-3755
R17	Composition, 20k ±5% 1/2 w	6100-3205
R18	Composition, 56k ±5% 1/2 w	6100-3565
R19	Potentiometer, Composition 1M ±20%	6020-0900
R20	Film, 1k ±1% 1/2 w	6250-1100
R21	Film, 25k ±1% 1/2 w	6250-2215
R22	Composition, 100k ±5% 1/2 w	6100-4105
R23	Composition, 2.2M ±5% 1/2 w	6100-5225
R24	Film, 1.2k ±1% 1/2 w	6450-1120
R25	Film, 18.6k ±1% 1/2 w	6450-2186
R26	Film, 20k ±1% 1/2 w	6450-2200
R27	Composition, 680k ±5% 1/2 w	6100-4685
R28	Potentiometer, Composition 5M ±20%	6010-2700
R29	Composition, 68 ±5% 1/2 w	6100-0685
R30	Composition, 4.7M ±5% 1/2 w	6100-5475
R31	Composition, 0.56M ±5% 1/2 w	6100-4565
R32	Potentiometer, Wire-wound 250 ±10%	6050-0900
R33	Composition, 68 ±5%	6100-0685
R34	Film, 600 ±1% 5 w	6144-0600
R35	Composition, 68k ±5% 1/2 w	6100-3685
R36	Potentiometer, Composition 100k ±10%	6010-1700
R37	Film, 90k ±1% 1/2 w	6350-2900
R38	Film, 90k ±1% 1/2 w	6350-2900
R39	Film, 491 ±1% 1/2 w	6450-0491
R40	Film, 121 ±1% 1/2 w	6450-0121
R41	Film, 12 ±1% 1/2 w	6450-9120
R42	Film, 590 ±1% 2 w	6590-0590
R43	Film, 588 ±1% 1/2 w	6450-0588
R44	Composition, 82k ±5% 1/2 w	6100-3825
R45	Composition, 56k ±10% 1 w	6100-3569
R46	Power, 450 ±5% 10 w	6670-1455
R47	Power, 450 ±5% 10 w	6670-1455
R48	Power, 450 ±5% 10 w	6670-1455
R49	Power, 1k ±5% 3 w	6680-2105
R50	Power, 1k ±5% 3 w	6680-2105
R51	Power, 1k ±5% 3 w	6680-2105
R52	Power, 1k ±5% 3 w	6680-2105
R53	Wire-wound, 120 ±10% 1/2 w	6760-1129
R54	Composition, 100k ±5% 1/2 w	6100-4105
R55	Composition, 100k ±5% 1/2 w	6100-4105
R56	Wire-wound, 1 ±10%	6760-9109
R57	Wire-wound, 50 ±10% 1/2 w Part of	7510-1930
R58	Film, 493 ±1/2% 2 w	6590-0493
R59	Wire-wound, 100 ±10% 1 w	6760-1129
R60	Composition, 330k ±5% 1/2 w	6100-4335
R61	Composition, 82k ±5% 1/2 w	6100-3825
R62	Wire-wound, 20 ±5% 2 w	6760-0205
R65	Film, 3.32k ±1%	6250-1332

MISCELLANEOUS

D1	DIODE, 1N54A (S)	6082-1005
D2	DIODE, 1N54A (S)	6082-1005
D3	DIODE, 1N3253	6081-1001
F1	FUSE 1.25 amp Slo-Blo Type 3AG (for 115 v)	5330-1600
	FUSE 0.6 amp Slo-Blo Type 3AG (for 230 v)	5330-1100
F2	FUSE 1.25 amp Slo-Blo Type 3AG (for 115 v)	5330-1600
	FUSE 0.6 amp Slo-Blo Type 3AG (for 230 v)	5330-1100
J1	JACK	4260-1300
J2	JACK	4260-1300
J3	BINDING POST	4060-0100
J4	BINDING POST	4060-0100
J5	BINDING POST	4060-1800
L1	INDUCTOR	1304-2040
L2	INDUCTOR	1304-2040
L3	INDUCTOR 250 mh +5%	0119-0300
L4	INDUCTOR 250 mh +5%	0119-0300
M1	METER 0-200μa	5730-1020
P1	PILOT LIGHT Mazda Type 44	5600-0700
PL1	PLUG	4240-0700
S1	SWITCH dpdt	7910-1600
S2	SWITCH 5-position	7890-0760
S3	SWITCH dpst	7910-1300
SO1	SOCKET	4230-3900
T1	TRANSFORMER	0485-4780
T2	TRANSFORMER	0365-4173
V1	TUBE, 6SL7-GT	8360-6900
V2	TUBE, 6SL7-GT	8360-6900
V3	TUBE, 6SA7	8360-6400
V4	TUBE, 6AV5-GA	8360-2390
V5	TUBE, 12AT7	8370-0200
V6	TUBE, 6AV5-GA	8360-2390
V7	TUBE, 0D3	8360-0600
V8	TUBE, 0D3	8360-0600
V9	TUBE, 5V4G	8350-0300

★ One 900 ±1%, 1304-4020 and one 525 ±1%, 1304-4010 in parallel.

All resistances are in ohms except as otherwise indicated by k (kilohms) or M (megohms).

All capacitances are in picofarads except as otherwise indicated by μf (microfarads).

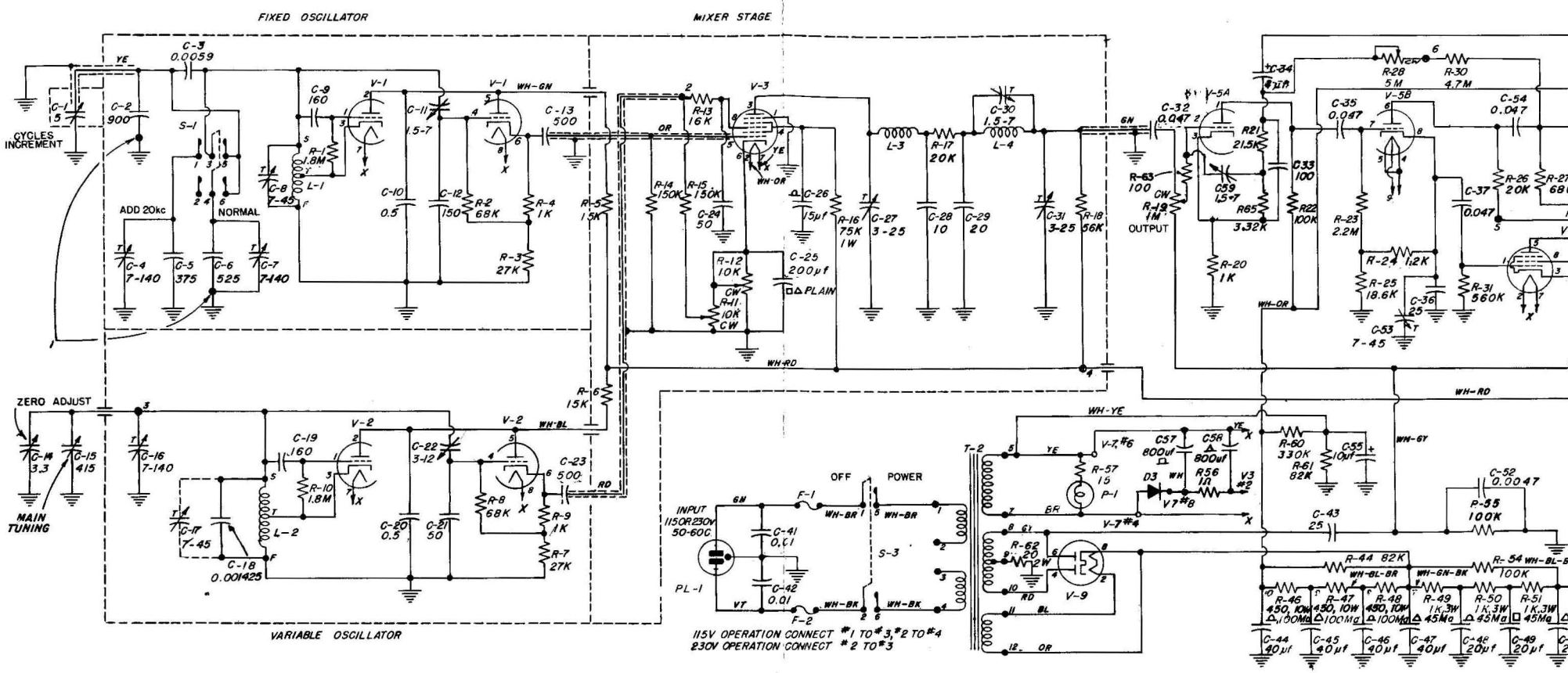

Figure 2. Detailed Schematic Diagram.

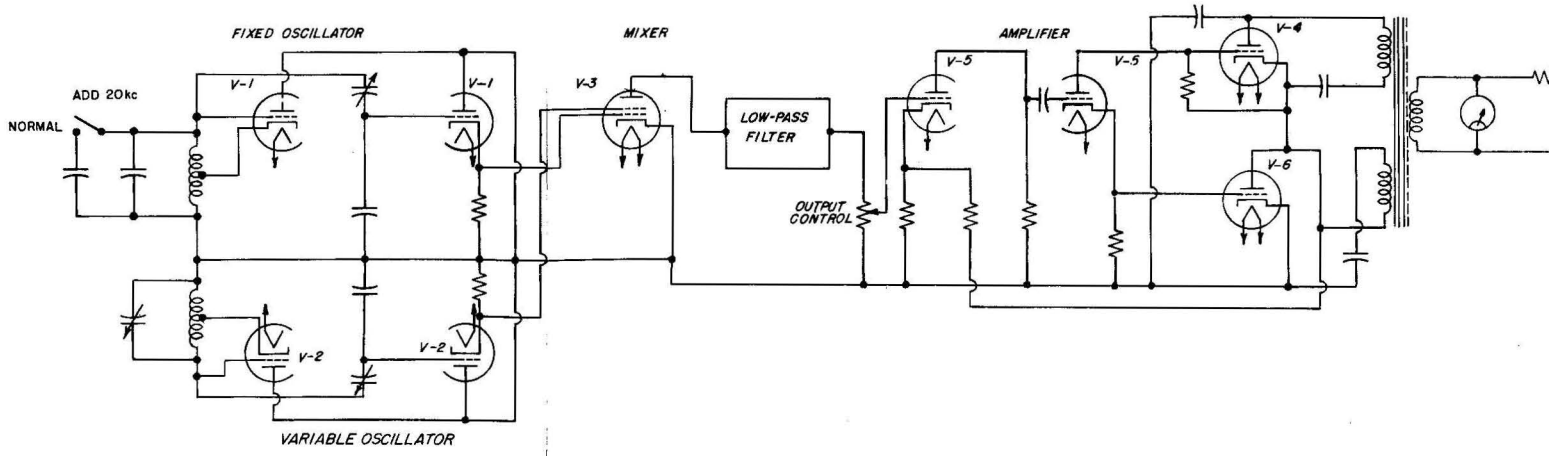

Figure 3. Elementary Schematic Diagram and Tube Location Diagra

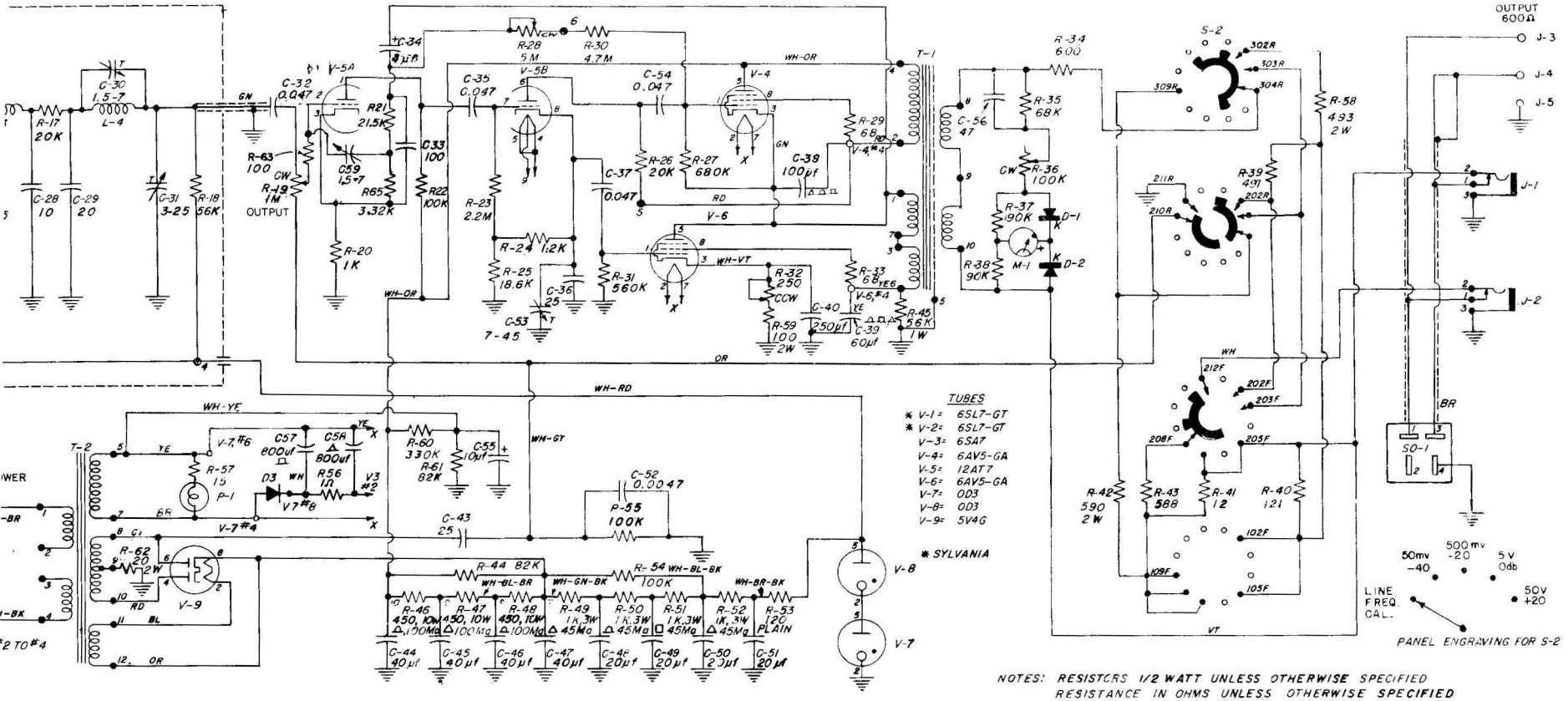

Figure 2. Detailed Schematic Diagram.

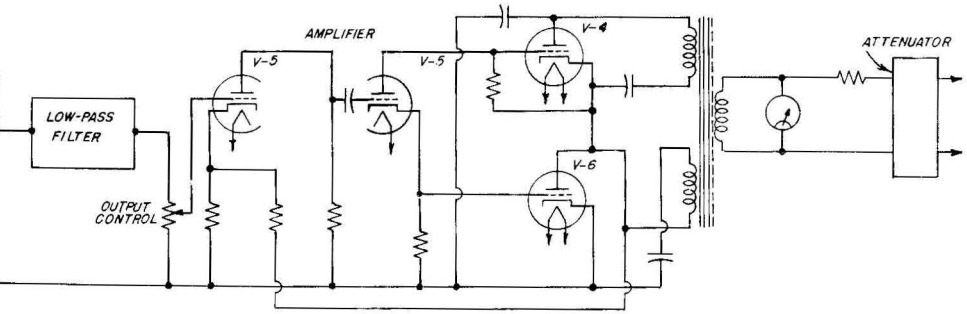

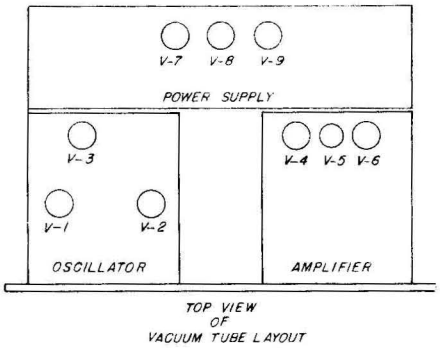

gure 3. Elementary Schematic Diagram and Tube Location Diagram.

APPENDIX

TYPE 1521-B GRAPHIC LEVEL RECORDER

The generator is ideally suited for use with the Type 1521-B Graphic Level Recorder, when a permanent record of level versus frequency is desired. The combination produces records having a true logarithmic frequency scale and is ideal for plotting frequency characteristics of analyzers, recording systems, networks, filters, and equalizers, as well as of loudspeakers, microphones, vibration pickups, and other transducers.

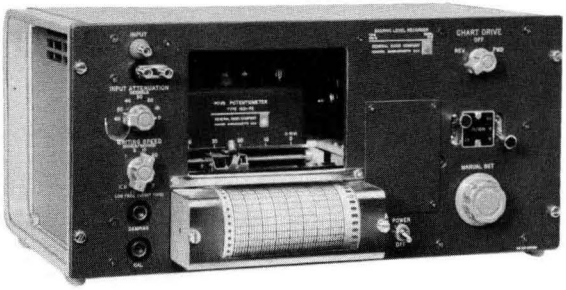

The recorder drives the generator dial through a chain-and-gear system, and the response is plotted on chart paper whose frequency scale matches that of the oscillator.

The recorder range is 40 dB full scale with the plug-in potentiometer supplied (20-dB, 80-dB, and dc potentiometers are also available). The recorder sensitivity is 1 mV (0-dB point) and can be varied from 1 mV to 1 volt in six steps. The writing speed is 20 in./sec with the 40-dB potentiometer (200 dB/sec) with less than 1 dB overshoot. Slower speeds (1, 3, or 10 in./sec) can be selected by switch to provide filtering of rapidly varying levels. The high-speed motor normally supplied offers paper speeds of 2.5, 7.5, 25, and 75 in./min. Optional models are available with speeds from either 2.5 to 75 in./hour or 0.5 to 15 in./min.

TYPE 1350-A GENERATOR-RECORDER ASSEMBLY

The Type 1521-B Graphic Level Recorder and the Type 1304-B Beat-Frequency Audio Generator, with their accessories, are included in the factory-assembled Type 1350-A Generator-Recorder Assembly.

Constant generator output and uniform recorder response make this an excellent assembly for measuring the response of filters, attenuators, networks, loud-speakers, amplifiers, microphones, transducers, and acoustic systems.

The complete assembly includes the following:

Type 1304-B Beat-Frequency Audio Generator with accessories, end frames, and rack supports.

Type 1521-B Graphic Level Recorder with accessories (including a 40-dB potentiometer), Type 1521-P19 motor, end frames, and rack supports.

1521-9427 Chart Paper, 10 rolls
Type 274-NP Patch Cord
Type 1521-P10B Drive Unit
Type 1521-P15 Link Unit
Type 1521-P16 Sprocket Kit
Type 1560-P95 Adaptor Cable
Type 1304-P1 Muting Switch

A high-speed motor (300 r/min) is supplied with the Type 1350-A Generator-Recorder Assembly and gives paper speeds of 2.5, 7.5, 25, and 75 inches per minute.

Separate instructions for the Type 1304-B Beat-Frequency Audio Generator, the Type 1521-B Graphic Level Recorder, and the Type 1304-P1 Muting Switch are included with the assembly.

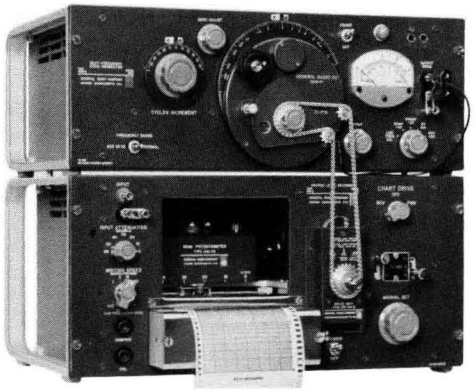

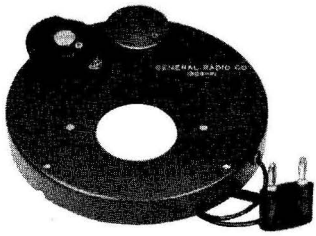

TYPE 1304-P1 MUTING SWITCH

The Type 1304-P1 Muting Switch is used to short-circuit the OUTPUT terminals of the Type 1304-B Beat-Frequency Audio Generator over any selected span (up to 255°) of the frequency dial. The dial can be rotated continuously over 360°, and the muting switch is primarily intended to short-circuit the generator output as the frequency passes through the zero-beat region. Low-frequency fluctuations in this area, if not eliminated, can cause mechanical damage to some systems, such as a loudspeaker or the pen-drive mechanism of the Type 1521-B Graphic Level Recorder. When the Type 1304-B Generator is used with this recorder, the muting switch can be adjusted to eliminate the output over the uncalibrated portion of the generator frequency dial; the recorder pen is thereby stopped, and superfluous tracings on the blank portion of the chart paper are eliminated.

The muting switch replaces the original frequency-dial cover on the Type 1304-B Generator.

Type 908-P1

Type 908-R96

TYPE 908 DIAL DRIVES

These dial drives are an inexpensive means of adapting manually operated equipment to sweep operation. They can be installed directly in place of the vernier knob on Type 908 Dials.

Each drive is powered by a synchronous motor. When the drive encounters a mechanical stop, it reverses automatically. Adjustable stops that clamp on the dial are furnished; power switch and power cord are included.

The Type 908 Dial Drives are available in any of three models that provide different dial rotation speeds, as shown in the accompanying table. An internal potentiometer in the Type 908-R96 model converts an externally supplied dc voltage to one that is proportional to the angle of dial rotation.

Drive Type	**908-P1**		**908-P2**		**908-R96**
Dial Type	907	908	907	908	908
**Dial Speed °/min*	144	96	1080	720	96
Resolution					0.2°
Recommended Display	Graphic Recorder		Oscilloscope		XY Recorder
Will Drive These Instruments	1208-C, 1209-C, 1209-CL, 1211-C, 1215-C, 1330-A, 1304-B, 1210-C, 1360-B, 1361-A		1209-C, 1209-CL, 1211-C, 1215-C, 1304-B, 1360-B, 1361-A		1208-C, 1209-C, 1209-CL, 1211-C, 1215-C, 1304-B, 1305-A, 1330-A
Dimensions	Depth 3, dia 3⅝ in (76, 92 mm)				Depth 3⅞, dia 5⅞ in (100, 150 mm)
Net Weight	1¼ lb (0.6 kg)				2 lb (0.9 kg)
Shipping Weight	3 lb (1.4 kg)				3 lb (1.4 kg)
Catalog Number	0908-9601		0908-9602		0908-9859

GENERAL RADIO COMPANY

WEST CONCORD, MASSACHUSETTS 01781

617 369-4400 617 646-7400

SALES ENGINEERING OFFICES

METROPOLITAN NEW YORK*

845 Broad Avenue
Ridgefield, New Jersey 07657
Telephone N.Y. 212 964-2722
N.J. 201 943-3140

SYRACUSE

Pickard Building
East Molloy Road
Syracuse, New York 13211
Telephone 315 454-9323

NEW ENGLAND*

22 Baker Avenue
West Concord, Massachusetts 01781
Telephone 617 646-0550

PHILADELPHIA

Fort Washington Industrial Park
Fort Washington, Pennsylvania 19034
Telephone 215 646-8030

WASHINGTON* AND BALTIMORE

11420 Rockville Pike
Rockville, Maryland 20852
Telephone 301 946-1600

ORLANDO

113 East Colonial Drive
Orlando, Florida 32801
Telephone 305 425-4671

CHICAGO*

9440 W. Foster Avenue
Chicago, Illinois 60656
312 992-0800

CLEVELAND

5579 Pearl Road
Cleveland, Ohio 44129
Telephone 216 886-0150

LOS ANGELES*

1000 North Seward Street
Los Angeles, California 90038
Telephone 213 469-6201

SAN FRANCISCO

626 San Antonio Road
Mountain View, California 94040
Telephone 415 948-8233

DALLAS*

2600 Stemmons Freeway, Suite 210
Dallas, Texas 75207
Telephone 214 637-2240

TORONTO*

99 Floral Parkway
Toronto 15, Ontario, Canada
Telephone 416 247-2171

MONTREAL

1255 Laird Boulevard
Town of Mount Royal, Quebec, Canada
Telephone 514 737-3673

OTTAWA Telephone 613 233-4237

* Repair services are available at these district offices.

General Radio Company (Overseas), 8008 Zurich, Switzerland
General Radio Company (U.K.) Limited, Bourne End, Buckinghamshire, England
Representatives in Principal Overseas Countries

Printed in USA